AFM Metal Specimen Discs

High quality magnetic stainless steel (alloy 430) discs for mounting AFM specimens are offered with smooth edges and consistently flat surfaces. The AFM disks are 22 gauge which is .0299" with a range of .0269 to .0329" thickness. Offered in packs of 50.

16208 AFM Metal Specimen Discs, 12mm . . . . . .pkg 50
16218 AFM Metal Specimen Discs, 15mm . . . . . .pkg 50

Round Glass Coverslips

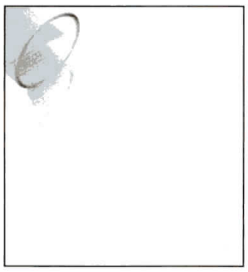

12mm, thickness #1 (.13 to .17mm thick) approx. 173 per ¼ oz.

15mm, thickness #1 (.13 to .17mm thick) approx. 111 per ¼ oz.

26023 Round Glass Coverslips, 12mm . . . . . .¼ oz.
26024 Round Glass Coverslips, 15mm . . . . . .¼ oz.

AFM Mica Discs

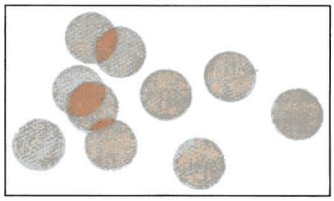

Highest quality grade V1 mica, 9.9mm diameter (.39"), .21mm (.0085") thick, interleafed.

50 AFM Mica Specimen Discs, 9.9mm . . . . .¼ oz.

PELCO® AFM Diskspenser

A practical way to store and dispense AFM discs. The plastic tubes in which the discs are packaged may be inserted into the PELCO® Diskpenser. With a turn of the cylinder one disc is dispensed, ready to be picked up with the PELCO® Disc Gripper as shown below. The PELCO® Diskpenser will dispense either 12mm or 15mm Discs.

16204 PELCO® AFM Diskspenser . . . . each

PELCO® AFM Disc Grippers

Specially designed rubber coated tips for picking up discs from a flat surface. Transfer Atomic Force Microscopy Discs from PELCO® Diskpenser to PELCO® Workstation to Microscope and to PELCO® Disc Carrier with ease.

Pictured: Disc Gripper in action

1668 PELCO® AFM Disc Grippers 12mm . . . . . .each
1669 PELCO® AFM Disc Grippers 15mm . . . . . .each

T = Tech Note on web page

PELCO® AFM Disc Pickup Tool (Magnetic Probe)

Picking up, transporting and placing AFM metal Discs without damage is made easy with the PELCO® Disc Pickup Tool. Comprised of a plastic handle, stainless steel shaft and a plastic composite magnetic pad on the tip.

16220 PELCO® AFM Disc Pickup Tool . . . . . .each

PELCO® AFM Workstation

Turned from solid aluminum, this workstation features an adjustable internal magnet to securely hold a metal AFM Specimen Disc in place. A tray around the circumference of the central disc holder may be used to catch residue or hold additional discs. T

15010 PELCO® AFM Workstation . . . . . .each

PELCO® AFM Disc Carriers and Pickup Tool

An inexpensive way to store 12mm and 15mm discs in a dust-free environment. Discs are placed face down into a stepped cavity where the specimen is protected. They are retrieved by using a PELCO® Pickup Tool. Fingers need not touch the disc. Sliding cover. Box size: 76.2 L x 40 W x 7.5 H (mm) (3" L x 1.58" W x .295" H)

16210 PELCO® AFM Disc Carrier, 12mm (holds 10) . .each
16214 PELCO® AFM Disc Carrier, 15mm (holds 8) . . .each
16220 PELCO® AFM Disc Pickup Tool . . . . . .each

PELCO® Silicon Nitride Coated 3mm Discs

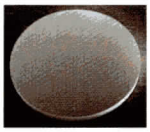

These 3mm silicon discs with EasyGrip™ edge have a 50nm ultra low stress silicon nitride layer on both sides and can be used for AFM applications. Thickness is 200µm. Surface roughness RA is 0.45 ±0.02nm.

21555-10 PELCO® Silicon Nitride 3mm Discs pkg/10

AFM Cantilever Tweezers

Easily grasp AFM cantilevers / probes with these precise stainless steel, non-magnetic tweezers. 4-⅝" (117mm) long.

Enlarged view of tips >

5599 AFM Cantilever Tweezers, Stainless Steel, Non-magnetic . . . . . .each

AFM Probes

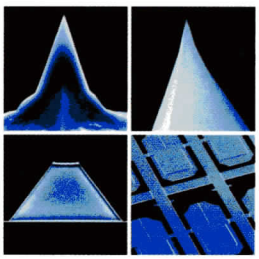

The right choice of AFM probes is extremely important for the quality of your AFM work. The BudgetSensors AFM probes are an excellent choice for today's high demands in nanotech research. Designed by specialists in AFM, they combine the latest technology of AFM tip/cantilever manufacturing with realistic pricing. Made of monolithic silicon, they fit into most commercially available AFM's (DI-nanoscope, PSI, JEOL, NT-MDT, Park, Asylum, Agilent, VEECO, WiTec, etc.) and outperform all other silicon AFM probes on the market when it comes to value, sharpness, symmetry and consistency. The BudgetSensors AFM probes are specifically designed for different AFM modes and are available with a variety of coatings to give the highest resolution needed for cutting edge nanoscale imaging.

The silicon AFM probe products are:

- **Tap300** series for tapping mode
- **Tap150G** series for soft tapping mode
- **Tap190G** series with longer cantilever for soft tapping mode
- **Multi75** series for force modulation mode
- **Contact** series for contact mode and pulse force mode
- **Magnetic AFM Probe**, an excellent choice for MFM applications
- **All-In-One**

go to:
www.tedpella.com/probes_html/budgetsensors.htm

Some AFM systems, such as NanoScale, require alignment grooves on the back side of the AFM holder chip for correct holding and calibration of each AFM probe. All products with alignment grooves have "-G-" in their product number. Available AFM Probes with alignment grooves are: Tap150-G; Tap190-G; Multi75Al-G; Multi75E-G; Multi75M-G; ContAl-G.

Please Note: The presence of the alignment grooves does not affect the AFM probe in systems that do not require this feature. AFM probes with grooves have the same specifications and pricing as the equivalent probes without alignment grooves.

You can order a combination of the probes of your choice; our **BudgetComboBox**, linked from our BudgetSensors web page, allows you to choose any combination (up to 50) from a selection of all available BudgetSensors AFM Probe models.

AFM probes are all available with some or all of the following high quality coatings (depending on series):

Al - Aluminum coating of the cantilever for enhanced reflectivity
Electri - Chromium/Platinum electrically conductive coating for Electric Modes
GD - Partial gold coating of the cantilever for enhanced reflectivity for special applications such as in liquids
GB - Overall gold coating of the cantilever where the probe acts as an electrode
M - Magnetic
DLC - Diamond-like Coating

For soft contact mode, BudgetSensor has developed twintip **SiNi Silicon Nitride AFM Probes**

Technical information and dimensions for the BudgetSensor AFM holder, cantilever and tip:

AFM Holder Chip

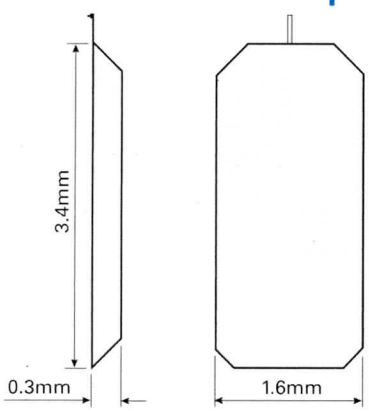

The AFM Holder Chip fits most commercial AFM's as it has industry standard size. It is compatible with DI Nanoscope, PSI, JEOL, NT-MDT, Asylum, Agilent, Park, VEECO, WiTec and other commercial AFM's

AFM Cantilever

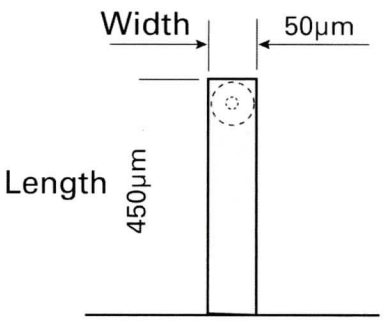

The AFM Cantilever is micromachined monolithic silicon, comprising excellent uniformity. It provides high quality imaging for all standard AFM's.

AFM Tip

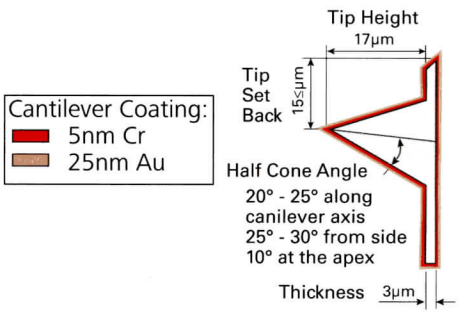

The AFM Tip is a micromachined monolithic Silicon probe, exhibiting excellent uniformity and a sharp tip radius. The consistent tip radius of less than 10nm gives good resolution and reproducibility. The probes (except the Silicon Nitride tip) feature an "on scan angle" symmetric tip to provide a more symmetric representation of features over 200nm.

■ Model • Tap300 / Tap300Al / Tap300GD / Tap300GB / ElectriTap300 / Tap300DLC

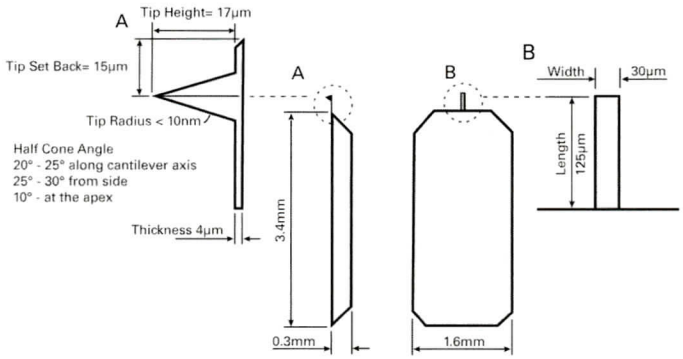

Technical Data	Value	Range
Resonant Freq.	300kHz	±100kHz
Force Constant	40N/m	20-75N/m
Length	125µm	±10µm
Mean Width	30µm	±5µm
Thickness	4µm	±1µm
Tip Height	17µm	±2µm
Tip Set Back	15µm	±5µm
Tip Radius	<10nm (Tap300; Tap300Al; Tap300GD; Tap300GB) <25nm (Electri-Tap 300)	
Half Cone Angle	20°-25° along cantilever axis 25°-30° from side 10° at the apex	

Tap300

Application: Tapping, Intermittent Contact
General: Rotated monolithic silicon probe, symmetric tip shape (chip size 3.4 x 1.6 x 0.3mm)
Coating: None

TAP300-10 Silicon AFM Probes, Tap 300, no coating pkg/10
TAP300-50 Silicon AFM Probes, Tap 300, no coating pkg/50
TAP300-W Silicon AFM Probes, Tap 300, no coating pkg/380

Tap300Al

Application: Tapping, Intermittent Contact
General: Rotated monolithic silicon probe, symmetric tip shape (chip size 3.4 x 1.6 x 0.3mm)
Coating: 30nm Al for enhanced reflectivity

TAP300AL-G-10 Silicon AFM Probes, Tap 300, Al, Aluminum Reflex coating pkg/10
TAP300AL-G-50 Silicon AFM Probes, Tap 300, Al, Aluminum Reflex coating pkg/50
TAP300AL-G-W Silicon AFM Probes, Tap 300, Al, Aluminum Reflex coating pkg/380

Tap300GD

Application: Non-contact, Tapping
General: Rotated monolithic silicon probe, symmetric tip shape (chip size 3.4 x 1.6 x 0.3mm)
Coating: 70nm Au on back of cantilever

TAP300GD-10 Silicon AFM Probes, Tap 300 GD, part Au coating pkg/10
TAP300GD-50 Silicon AFM Probes, Tap 300 GD, part Au coating pkg/50

Tap300GB

Application: Non-contact, Tapping, special application
General: Rotated monolithic silicon probe, symmetric tip shape (chip size 3.4 x 1.6 x 0.3mm)
Coating: 70nm Au on both sides of cantilever

TAP300GB-10 Silicon AFM Probes, Tap 300 GB, overall Au coating pkg/10
TAP300GB-50 Silicon AFM Probes, Tap 300 GB, overall Au coating pkg/50

continued on next page

ElectriTap300

Application: Tapping, Intermittent Contact Mode and Electric Modes like:
Scanning Capacitance Microscopy (SCM)
Electrostatic Force Microscopy (EFM)
Kelvin Probe Force Microscopy (KFM)
Scanning Probe Lithography
General: Rotated monolithic silicon probe, symmetric tip shape (chip size 3.4 x 1.6 x 0.3mm)
Coating: Electrically conductive Cr/Pt on both sides of cantilever. 5nm Cr covered with 25nm Pt.

TAP300E-10 Silicon AFM Probes, ElectriTap 300, overall Cr/Pt coating pkg/10
TAP300E-50 Silicon AFM Probes, ElectriTap 300, overall Cr/Pt coating pkg/50

Tap300DLC

Application: Tapping, Intermittent Contact Mode
General: Rotated monolithic silicon probe, symmetric tip shape, alignment grooves (chip size 3.4 x 1.6 x 0.3mm)
Coating: Diamond-Like-Coating on tip side of cantilever, 15nm thick Aluminum Reflex coating on detector side of cantilever, 30nm thick. This probe uses an "on scan angle" symmetric tip to provide a more symmetric representation of features over 200nm

TAP300DLC-10 Silicon AFM Probes, Tap 300 DLC, DLC coating on tip pkg/10
TAP300DLC-50 Silicon AFM Probes, Tap 300 DLC, DLC coating on tip pkg/50

■ Model • Tap190-G / Tap190Al-G / ElectriTap190-G / Tap190DLC

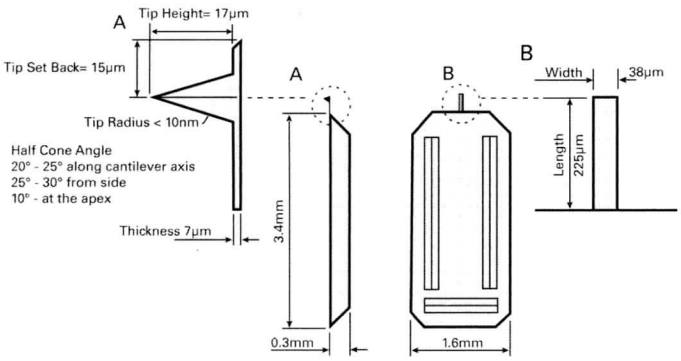

Technical Data	Value	Range
Resonant Freq.	190kHz	±60kHz
Force Constant	48N/m	20-100N/m
Length	225µm	±12µm
Mean Width	38µm	±9µm
Thickness	7µm	±1µm
Tip Height	17µm	±2µm
Tip Set Back	15µm	±5µm
Tip Radius	<10nm	
Half Cone Angle	20°-25° along cantilever axis 25°-30° from side 10° - at the apex	

The Tap190-G series of AFM probes are characterized by a resonance frequency of 190kHz and have a longer cantilever compared to the TAP300 and TAP150-G AFM probes. This is required by some models of AFM systems by certain manufacturers, such as Quesant. This product is available with alignment grooves only.

Tap190-G

Application: Soft Tapping Mode, Intermittent Contact Mode, long cantilever
General: Rotated monolithic silicon probe, symmetric tip Shape (chip size 3.4 x 1.6 x 0.3mm)
Coating: None

TAP190-G-10 Silicon AFM Probes, Tap 190, no coating pkg/10
TAP190-G-50 Silicon AFM Probes, Tap 190, no coating pkg/50

Tap190Al-G

Application: Soft Tapping Mode, Intermittent Contact Mode, long cantilever
General: Rotated monolithic silicon probe, symmetric tip shape (chip size 3.4 x 1.6 x 0.3mm)
Coating: Aluminum reflex coating, 30nm thick. This probe uses an "on scan angle" symmetric tip to provide a more symmetric representation of features over 200nm.

TAP190AL-G-10 Silicon AFM Probes, Tap 190 Al, Aluminum Reflex coating pkg/10
TAP190AL-G-50 Silicon AFM Probes, Tap 190 Al, Aluminum Reflex coating pkg/50

continued on next page

ElectriTap190-G

Application: Tapping Mode, Intermittent Contact Mode, Long Cantilever, electric modes measurements
General: Rotated Monolithic silicon probe, Symmetric tip shape, Chipsize 3.4 x 1.6 x 0.3 mm, Alignment Grooves
Coating: Electrically conductive Cr/Pt on both sides of cantilever. 5nm Cr covered with 25nm Pt.

TAP190E-G-10 Silicon AFM Probes, ElectriTap 300, overall Cr/Pt coating pkg/10
TAP190E-G-50 Silicon AFM Probes, ElectriTap 300, overall Cr/Pt coating pkg/50

Tap190DLC

Application: Soft Tapping Mode, Intermittent Contact Mode, long cantilever
General: Rotated monolithic silicon probe, symmetric tip shape (chip size 3.4 x 1.6 x 0.3mm)
Coating: Diamond-Like-Coating on tip side of cantilever, 15nm thick Aluminum Reflex coating on detector side of cantilever, 30nm thick. This probe uses an "on scan angle" symmetric tip to provide a more symmetric representation of features over 200nm

TAP190DLC-10 Silicon AFM Probes, Tap 190 DLC, DLC coating on tip pkg/10
TAP190DLC-50 Silicon AFM Probes, Tap 190 DLC, DLC coating on tip pkg/50

■ Model • Tap150-G / Tap150Al-G / Tap150DLC

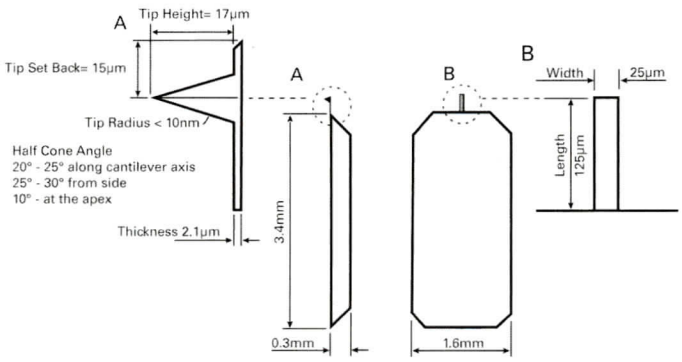

Technical Data	Value	Range
Resonant Freq.	150kHz	±75kHz
Force Constant	5N/m	20-75N/m
Length	125µm	±10µm
Mean Width	25µm	±5µm
Thickness	2.1µm	±1µm
Tip Height	17µm	±2µm
Tip Set Back	15µm	±5µm
Tip Radius	<10nm	
Half Cone Angle	20°-25° along cantilever axis 25°-30° from side 10° - at the apex	

Tap150-G

Application: Soft Tapping Mode, Intermittent Contact Mode
General: Rotated monolithic silicon probe, symmetric tip shape (chip size 3.4 x 1.6 x 0.3mm)
Coating: None
This probe uses an "on scan angle" symmetric tip to provide a more symmetric representation of features over 200nm

TAP150-G-10 Silicon AFM Probes, Tap 150, no coating pkg/10
TAP150-G-50 Silicon AFM Probes, Tap 150, no coating pkg/50

Tap150Al-G

Application: Soft Tapping Mode, Intermittent Contact Mode
General: Rotated monolithic silicon probe, symmetric tip shape (Chip size 3.4 x 1.6 x 0.3mm)
Coating: Aluminum reflex coating, 30nm thick
This probe uses an "on scan angle" symmetric tip to provide a more symmetric representation of features over 200nm

TAP300AL-G-10 Silicon AFM Probes, Tap 300, Al, Aluminum Reflex coating pkg/10
TAP300AL-G-50 Silicon AFM Probes, Tap 300, Al, Aluminum Reflex coating pkg/50

continued on next page

Tap150DLC

Application: Soft Tapping Mode, Intermittent Contact Mode
General: Rotated monolithic silicon probe, symmetric tip shape (Chip size 3.4 x 1.6 x 0.3mm), Alignment Grooves
Coating: Diamond-Like-Coating on tip side of cantilever, 15nm thick Aluminum Reflex coating on detector side of cantilever, 30nm thick. This probe uses an "on scan angle" symmetric tip to provide a more symmetric representation of features over 200nm

TAP150DLC-10 Silicon AFM Probes, Tap 150 DLC, DLC coating on tip pkg/10
TAP150DLC-50 Silicon AFM Probes, Tap 150 DLC, DLC coating on tip pkg/50

Model • Multi75 / Multi75Al & Multi75Al-G / Multi75GD / Multi75GB / ElectriMulti75 &-G / MagneticMulti75 &-G / Multi75DLC

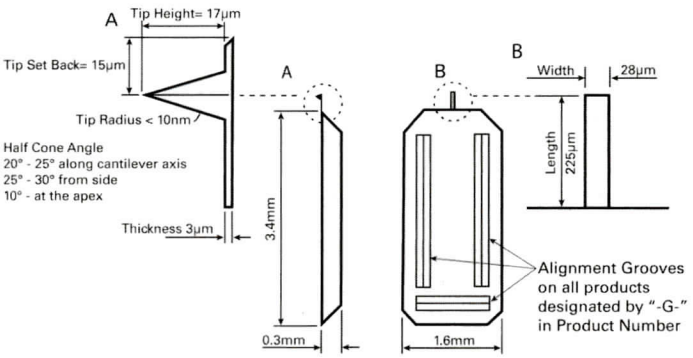

Technical Data	Value	Range
Resonant Freq.	75kHz	±15kHz
Force Constant	3N/m	1-7N/m
Length	225µm	±10µm
Mean Width	28µm	±5µm
Thickness	3µm	±1µm
Tip Height	17µm	±2µm
Tip Set Back	15µm	±5µm
Tip Radius	<10 nm (Multi75; Multi75Al; Multi75GD; Multi75GB) <25nm (ElectriMulti75) <60nm (MagneticMulti75)	
Half Cone Angle	20°-25° along cantilever axis 25°-30° from side 10°-at the apex	
Contact Resistance	300 ohms on platinum thin film surface	

Multi75

Application: Force Modulation, Light Tapping
General: Rotated monolithic silicon probe, symmetric tip shape (chip size 3.4 x 1.6 x 0.3mm)
Coating: None

MULTI75-10 Silicon AFM Probes, Multi 75, no coating pkg/10
MULTI75-50 Silicon AFM Probes, Multi 75, no coating pkg/50
MULTI75-W Silicon AFM Probes, Multi 75, no coating pkg/380

Multi75Al

Application: Force Modulation, Light Tapping
General: Rotated monolithic silicon probe, symmetric tip shape (chip size 3.4 x 1.6 x 0.3mm)
Coating: 30nm Al for enhanced reflectivity

MULTI75AL-10 Silicon AFM Probes, Multi 75 Al, Aluminum Reflex coating pkg/10
MULTI75AL-50 Silicon AFM Probes, Multi 75 Al, Aluminum Reflex coating pkg/50
MULTI75AL-W Silicon AFM Probes, Multi 75 Al, Aluminum Reflex coating pkg/380

Multi75Al with Alignment Grooves:

MULTI75AL-G-10 Silicon AFM Probes, Multi 75 Al, Aluminum Reflex coating pkg/10
MULTI75AL-G-50 Silicon AFM Probes, Multi 75 Al, Aluminum Reflex coating pkg/50
MULTI75AL-G-W Silicon AFM Probes, Multi 75 Al, Aluminum Reflex coating pkg/380

continued on next page

Multi75GD

Application: Force Modulation, Light Tapping
General: Rotated monolithic silicon probe, symmetric tip shape, alignment grooves (chip size 3.4 x 1.6 x 0.3mm)
Coating: 70nm Au on back of cantilever

MULTI75GD-10 Silicon AFM Probes, Multi 75 GD, part Au coated pkg/10
MULTI75GD-50 Silicon AFM Probes, Multi 75 GD, part Au coated pkg/50

Multi75GB-G

Application: Force Modulation, Light Tapping, special application
General: Rotated monolithic silicon probe, symmetric tip shape, alignment grooves (chip size 3.4 x 1.6 x 0.3mm)
Coating: 70nm Au on both sides of cantilever

MULTI75GB-G-10 Silicon AFM Probes, Multi 75 GB, overall Au coated pkg/10
MULTI75GB-G-50 Silicon AFM Probes, Multi 75 GB, overall Au coated pkg/50

ElectriMulti75-G

Application: Force Modulation, Light Tapping and Electric Modes like:
Scanning Capacitance Microscopy (SCM)
Electrostatic Force Microscopy (EFM)
Kelvin Probe Force Microscopy (KFM)
Scanning Probe Lithography
General: Rotated monolithic silicon probe, symmetric tip shape (chip size 3.4 x 1.6 x 0.3mm), alignment grooves
Coating: Electrically conductive Cr/Pt on both sides of cantilever, 5nm Cr covered with 25nm Pt

MULTI75E-10 Silicon AFM Probes, ElectriMulti 75, overall Cr/Pt coated pkg/10
MULTI75E-50 Silicon AFM Probes, ElectriMulti 75, overall Cr/Pt coated pkg/50

Multi75E with Alignment Grooves:
MULTI75E-G-10 Silicon AFM Probes, ElectriMulti 75, overall Cr/Pt coated pkg/10
MULTI75E-G-50 Silicon AFM Probes, ElectriMulti 75, overall Cr/Pt coated pkg/50

MagneticMulti75

Application: Magnetic Force Microscopy (MFM)
General: Rotated monolithic silicon probe, symmetric tip shape, alignment grooves chip size 3.4 x 1.6 x 0.3mm)
Coating: Tip side - magnetic, detector side - aluminum

MULTI75M-10 Silicon AFM Probes, MagneticMulti 75, Magnetic/Al coated pkg/10
MULTI75M-50 Silicon AFM Probes, MagneticMulti 75, Magnetic/Al coated pkg/50

Multi75M with Alignment Grooves:
MULTI75M-G-10 Silicon AFM Probes, MagneticMulti 75, Magnetic/Al coated pkg/10
MULTI75M-G-50 Silicon AFM Probes, MagneticMulti 75, Magnetic/Al coated pkg/50

Multi75DLC

Application: Soft Tapping Mode, Intermittent Contact Mode
General: Rotated monolithic silicon probe, symmetric tip shape (Chip size 3.4 x 1.6 x 0.3mm), Alignment Grooves
Coating: Diamond-Like-Coating on tip side of cantilever, 15nm thick Aluminum Reflex coating on detector side of cantilever, 30nm thick. This probe uses an "on scan angle" symmetric tip to provide a more symmetric representation of features over 200nm

MULTI75DLC-10 Silicon AFM Probes, Multi 75 DLC, DLC coating on tip pkg/10
MULTI75DLC-50 Silicon AFM Probes, Multi 75 DLC, DLC coating on tip pkg/50

■ Model • Contact / ContAl & ContAl-G / ContGD / ContGB / ElectriCont / ContDLC

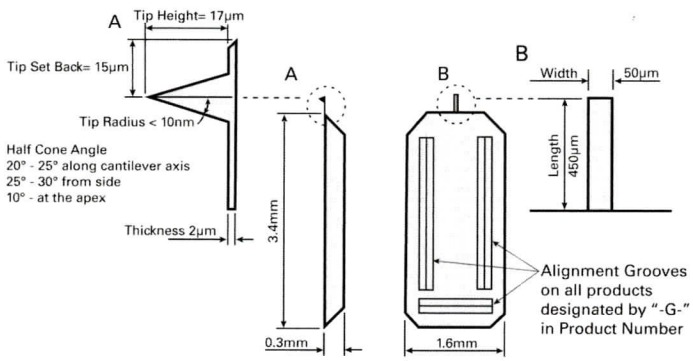

Technical Data	Value	Range
Resonant Freq.	13kHz	±4kHz
Force Constant	0.2N/m	0.07-0.4N/m
Length	450µm	±10µm
Mean Width	50µm	±5µm
Thickness	2µm	±1µm
Tip Height	17µm	±2µm
Tip Set Back	15µm	±5µm
Tip Radius	<10nm (Contact; ContAl; ContGD; ContGB) <25nm (ElectriCont)	
Half Cone Angle	20°-25° along cantilever axis 25°-30° from side 10° - at the apex	

Contact

Application: Contact Mode, Pulsed Force Mode (PFM)
General: Rotated monolithic silicon probe (chip size 3.4 x 1.6 x 0.3mm)
Coating: None

CONTACT-10 Silicon AFM Probes, Cont, no coating pkg/10
CONTACT-50 Silicon AFM Probes, Cont, no coating pkg/50
CONTACT-W Silicon AFM Probes, Cont, no coating pkg/380

ContAl

Application: Contact Mode, Pulsed Force Mode (PFM)
General: Rotated monolithic silicon probe (chip size 3.4 x 1.6 x 0.3mm)
Coating: 30nm Al for enhanced reflectivity

CONTAL-10 Silicon AFM Probes, Cont, Aluminum Reflex coating pkg/10
CONTAL-50 Silicon AFM Probes, Cont, Aluminum Reflex coating pkg/50
CONTAL-W Silicon AFM Probes, Cont, Aluminum Reflex coating pkg/380

ContAl with Alignment Grooves
CONTAL-G-10 Silicon AFM Probes, Cont, Aluminum Reflex coating pkg/10
CONTAL-G-50 Silicon AFM Probes, Cont, Aluminum Reflex coating pkg/50
CONTAL-G-W Silicon AFM Probes, Cont, Aluminum Reflex coating pkg/380

ContGD

Application: Contact Mode, Pulsed Force Mode (PFM)
General: Rotated monolithic silicon probe (chip size 3.4 x 1.6 x 0.3mm)
Coating: 70nm Au on back of cantilever

CONTGD-10 Silicon AFM Probes, Cont GD, part Au coated pkg/10
CONTGD-50 Silicon AFM Probes, Cont GD, part Au coated pkg/50

ContGB

Application: Contact Mode, Pulsed Force Mode (PFM)
General: Rotated monolithic silicon probe (chip size 3.4 x 1.6 x 0.3mm)
Coating: 70nm Au on both sides of cantilever

CONTGB-10 Silicon AFM Probes, Cont GB, overall Au coated pkg/10
CONTGB-50 Silicon AFM Probes, Cont GB, overall Au coated pkg/50

continued next page

ElectriCont

Application: Contact Mode, Pulsed Force Mode (PFM) and Electric Modes like:
Scanning Capacitance Microscopy (SCM)
Electrostatic Force Microscopy (EFM)
Kelvin Probe Force Microscopy (KFM)
Scanning Probe Lithography

General: Rotated Monolithic Silicon Probe, Symmetric Tip Shape (Chip size 3.4 x 1.6 x 0.3mm)

Coating: Electrically conductive Cr/Pt on both sides of cantilever, 5nm Cr covered with 25nm Pt

CONTE-10 Silicon AFM Probes, ElectriCont, overall Cr/Pt coating pkg/10
CONTE-50 Silicon AFM Probes, ElectriCont, overall Cr/Pt coating pkg/50

ElectriCont-G with Alignment Grooves
CONTE-G-10 Silicon AFM Probes, ElectriCont-G, overall Cr/Pt coating pkg/10
CONTE-G-50 Silicon AFM Probes, ElectriCont-G, overall Cr/Pt coating pkg/50

ContDLC

Application: Contact Mode

General: Rotated monolithic silicon probe, symmetric tip shape (Chip size 3.4 x 1.6 x 0.3mm), Alignment Grooves

Coating: Diamond-Like-Coating on tip side of cantilever, 15nm thick Aluminum Reflex coating on detector side of cantilever, 30nm thick. This probe uses an "on scan angle" symmetric tip to provide a more symmetric representation of features over 200nm

CONTEDLC-10 Silicon AFM Probes, Cont DLC, DLC coating on tip pkg/10
CONTEDLC-50 Silicon AFM Probes, Cont DLC, DLC coating on tip pkg/50

■ Model • SiNi AFM Probes

Silicon Nitride Holder Chip

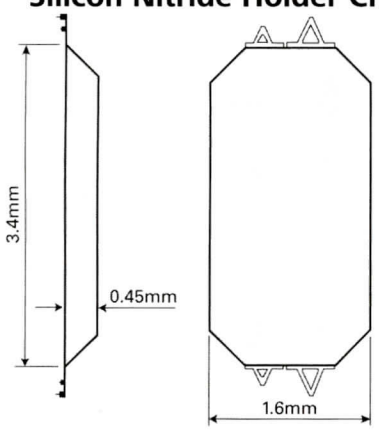

Silicon Nitride Holder Chip fits most commercial AFMs as it is industry standard size. It is compatible with Di/Veeco AFMs, TM Microscopes, JEOL, Molecular Imaging and other commercial AFMs.

Silicon Nitride Cantilever

SiN (Si_3N_4) probes feature 4 cantilevers per chip. The cantilever's low force constants make these probes ideal for very soft contact mode imaging.

The oxide-sharpened wedge tip has two peaks per tip, a "twin tip". The protrusion at the cantilever's end is used for imaging, since the cantilever is mounted at some angle (e.g. 13 dek.) which keeps only one tip interacting with the surface if the sample is sufficiently flat. (Valleys are not greater than 400nm deep.)

Silicon Nitride Tip

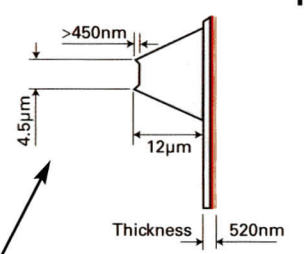

Wedge tip with 12 µm overall tip height and >450nm effective tip height

Double tip spacing 4.5mm

Tip Radius of curvative <15nm
Tip Set Back (first tip) <12mm

Half Cone Angle
70° - from Top and from Side
15° <at the apex (last 200nm)

Cantilever Backside Coating:
10nm Cr
60nm Au

Application: Soft Contact Mode
General: 4 Silicon Nitride Cantilevers (Triangular, 2 different lengths)
Silicon Nitride Wedge Tip
Silicon Support Chip
(3.4mm x 1.6mm x 0.45mm)

Cantilever lengths: 100µm and 200µm
Cantilever bending: <3°
Coating: 70nm thick Gold/Chromium
Resonant frequencies: 30 kHz and 10 kHz
Force constants: 0.27nm and 0.06nm

continued next page

Model • SiNi AFM Probes *continued*

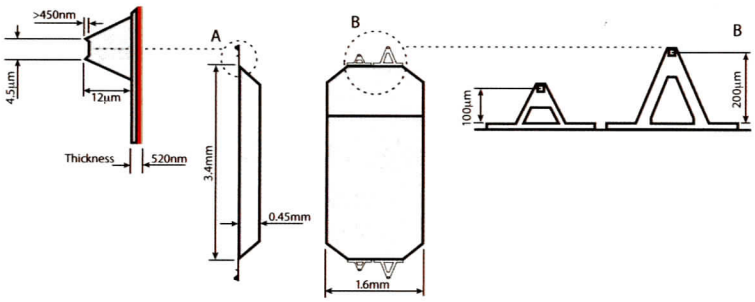

Cantilever Backside Coating:
- 10nm Cr
- 60nm Au

Values:	Short Cantilever	Long Cantilever	Range
Resonant Freq.	45kHz	12.6kHz	-
Force Constant	0.27N/m	0.06N/m	-
Lengths	100µm	200µm	±10µm
Widths	16µm	30µm	±5µm
Thickness	520µm		±1µm
Tip Height (Wedge Tip)	12µm (overall) >450nm (effective)		±2µm 454-550nm
Double Tip Spacing	15µm		±0.5µm
Tip Radius	<5nm		
Half Cone Angle	35° (macroscopic)		
Reflex Coating	Chromium/Gold		
Cantilever Bending	typically 3°, max 7°		

SINI-30 Silicon Nitride AFM Probes, SiN, Cr/Au Reflex coating pkg/30
SINI-100 Silicon Nitride AFM Probes, SiN, Cr/Au Reflex coating pkg/100
SINI-300 Silicon Nitride AFM Probes, SiN, Cr/Au Reflex coating pkg/300

Model • All-In-One / All-In-One-Al

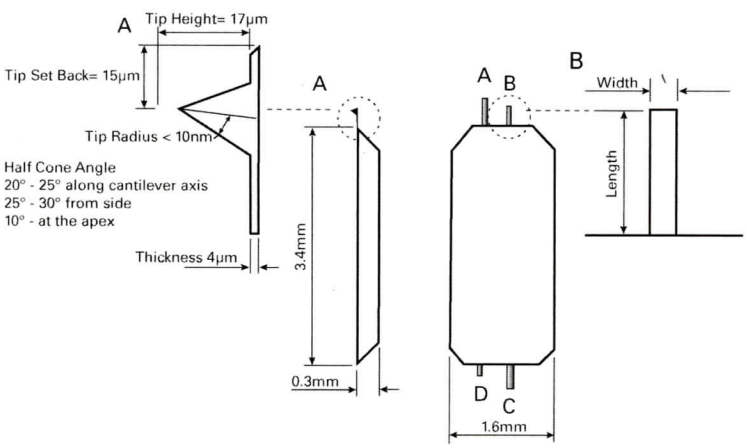

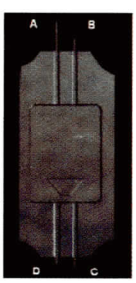

The All-In-One Series probes offer four cantilevers with different geometry for all topography measurement modes: contact mode, force modulation, soft tapping and tapping mode. The resonance frequencies and force constants are similar to the ones of the well-established models Contact, Multi75, Tap150 and Tap300 or ContAL, Multi75AL, Tap150AL and Tap300AL for the model with Aluminum Reflex coating.

The long cantilevers A for contact mode and B for force modulation are located at one end of the chip, while the short cantilevers C for soft tapping and D for tapping mode are located at the opposite end. The short cantilever end is marked by a trapezoidal pattern visible with bare eyes.

Technical Data: All-In-One

	Cantilever A		Cantilever B		Cantilever C		Cantilever D	
Application	**Contact Mode**		**Force modulation, Pulsed Force Mode**		**Soft Tapping Mode, Intermittent Contact-Mode**		**Tapping Mode, Intermittent Contact-Mode**	
	Values	**Range**	**Values**	**Range**	**Values**	**Range**	**Values**	**Range**
Resonant Frequency	15 kHz	±15 kHz	80 kHz	±30 kHz	150 kHz	±80 kHz	350 kHz	±150 kHz
Force Constant	0.2 N/m	0.04-0.7 N/m	2.7 N/m	0.4- 0 N/m	7.4 N/m	1-29 N/m	40 N/m	7-160 N/m
Resonant Frequency and Force Constant Similar to	Contact		Multi75		Tap150-G		Tap300	
Cantilever Length	500µm	±10µm	210µm	±10µm	150µm	±10µm	100µm	±10µm
Mean Width	30µm	±5µm	30µm	±5µm	30µm	±5µm	50µm	±5µm
Thickness	2.7µm	±1µm	2.7µm	±1µm	2.7µm	±1µm	2.7µm	±1µm
Tip Height	17µm	±2µm	17µm	±2µm	17µm	±2µm	17µm	±2µm
Tip Set Back	15µm	±5µm	15µm	±5µm	15µm	±5µm	15µm	±5µm
Tip Radius	<10nm							
Coating	None or Aluminum Reflex							
Half Cone Angle	20 - 25° along cantilever axis, 25° - 30° from side, 10° at the apex							

continued next page

continued from previous page

All-In-One

Application: Several Measurement Modes
General: Rotated Monolithic Silicon Probe, Symmetric Tip Shape (Chip size 3.4 x 1.6 x 0.3mm)
Coating: None
Technical Data: This probe uses "on scan angle" symmetric tips to provide a more symmetric representation of features over 200nm.

AIO-10 Silicon AFM Probes, All-In-One, no coating pkg/10
AIO-50 Silicon AFM Probes, All-In-One, no coating pkg/50

All-In-One-Al

Application: Several Measurement Modes
General: Rotated Monolithic Silicon Probe, Symmetric Tip Shape (Chip size 3.4 x 1.6 x 0.3mm)
Coating: Aluminum reflex coating, 30nm thick
Technical Data: This probe uses "on scan angle" symmetric tips to provide a more symmetric representation of features over 200nm.

AIOAL-10 Silicon AFM Probes, All-In-One, Aluminum Reflex Coating pkg/10
AIOAL-50 Silicon AFM Probes, All-In-One, Aluminum Reflex Coating pkg/50

AFM Calibration

TipChecker for AFM probes

When imaging a sample by AFM, it is imperative to know the condition of the AFM probe, since this determines the quality and correctness of the image. The TipChecker is an SPM sample for fast, convenient and efficient determination of the AFM tip condition. The clear differences between the tips becomes apparent even with a single scan line. The TipChecker offers a fast and easy way to compare and categorize different AFM tips with respect to tip apex, shape and sharpness. The TipChecker sample enables checking if the tip is still good, starts showing wear or is blunted or broken without the need for scanning an entire image or using SEM inspection. The Tip Checker sample works perfectly with Auto Tip Qualification and Tip Characterization software that is available on the market.

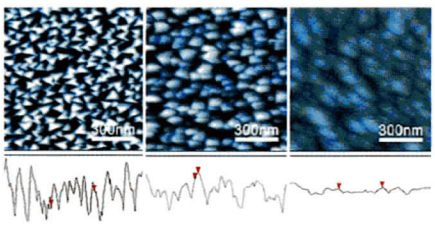

good *worn tip* *blunt or broken*

Figures showing a comparison between different AFM probe tips used to image the TipChecker sample. Scan is 1x1µm for all images, height is 100nm. Each image is shown with a representative cross-section scan.

The BudgetSensors TipChecker sample consists of an extremely wear-resistant thin film coating deposited on a silicon chip. The thin film coating shows a granular, sharply peaked nanostructure ideal for reversely imaging an AFM probe's apex. The die size of the BudgetSensors TipChecker is 5x5mm and comes glued onto a 12mm diameter, stainless steel, magnetic disc, ready to be placed into your AFM set.

TC1 BudgetSensors TipChecker for AFM probes . . . .each

AFM Gold Calibration Kit

Characterized colloidal gold particles for:

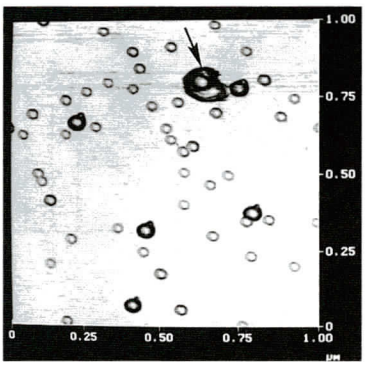

- **Characterization of scanning tip geometry**
- **Reliable calibration of the vertical scale of piezoelectric response**
- **Characterizing vertical dimensions of coadsorbed biomolecules**

Three sizes of colloidal gold particles are available in a convenient kit form. The kit contains 8 numbered 15mm AFM discs with mica attached for calibration and tip characterization. Remaining colloidal gold can be used for coadsorption with biomolecules or other samples.

16200 and 16205 Kits Contain:

- PELCO® 15mm AFM Disc Carrier
- 15mm AFM Discs, numbered with 9.9mm Mica Discs attached, 8 ea., in 16214 PELCO® Disc Carrier
- PELCO® AFM Disc Pickup Tool
- Gold Colloid, 5nm Range, 500µl
- Gold Colloid, 15nm Range, 500µl
- Gold Colloid, 30nm Range, 500µl
- Poly-L-Lysine, 0.1%, 500µl
- Protocol & Reprint (see below)

16200 PELCO® AFM Gold Standard Kit . . . . . .each

16205 Same as above plus 2 additional gold sizes, 10 & 20nm Range . . . . . .each

Vesenka J, Manne S, Giberson R, Marsh T and Henderson E, 1993. Colloidal Gold Particles as an Incompressible Atomic Force Microscope Imaging Standard for Assessing the Compressibility of Biomolecules. Biophysical Journal 65:1-6.

See abstract on web page: tedpella.com/Calibrat_html/16200.htm

2,160 Waffle Grating Replica

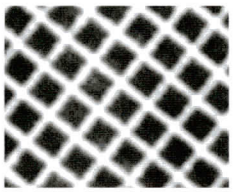

X-Y piezoelectric calibration with 2,160 lines/mm crossed line grating replica mounted on a 12mm disc.

AFM image of cross line grating replica

607-AFM X-Y Piezoelectric Cross Line Grating Replica on 12mm Specimen Disc ⓣ . . . . . .each

607-STM X-Y Piezoelectric Cross Line Grating Replica, Carbon/Au/Pd Coated ⓣ . . . . . .each

Highly Oriented Pyrolytic Graphite (H.O.P.G.)

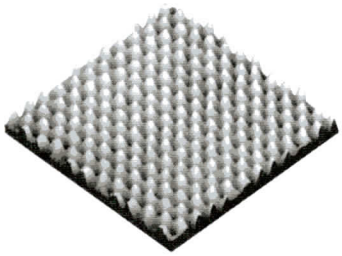

This is widely used as a substrate for specimens to be examined in scanning probe microscopes. It may also be used as a calibration specimen. The HOPG consists of planes of carbon atoms (002) which are highly oriented with respect to each other. This parallelness is characterized by the mosaic spread angle which is 3.5° ±1.5°.

626 Highly Oriented Pyrolytic Graphite, 10mm x 10mm x 2mm ⓣ . . . . . .each

MetroChip Microscope Calibration Target

Prod. No. 632

- **For SEM but may also be used for AFM**
- **150nm feature depth with 90° well angles**
- **For a detailed description and ordering information go to SEM Calibration, page 00.**

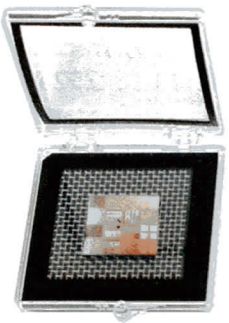

Magnification Calibration, MRS-3, MRS-4 and MRS-5

Product No's:
614-1 to 614-3
614-821 to 614-823
614-50 and 614-51

For SEM, STM, EDS, WDS, XRF and XPS but may also be used for AFM and TEM.

For a detailed description and ordering information go to SEM Calibration, page 40.

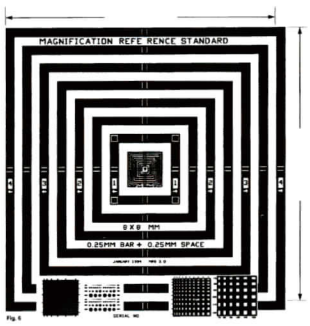

ⓣ= Tech Note on web page

High Magnification, High Resolution Reference and Calibration Standards for AFM, SEM, Auger and FIB

Holographic Grating for Scanning Electron Microscopy, Atomic Force Microscopy, Auger and Focused Ion Beam

Precision, holographic patterns, provide accurate calibration and feature high stability and usability. Moderate ridge heights are convenient for AFM. Specimens provide good contrast for secondary and backscatter imaging with SEM. They enable accurate calibration for high resolution, nanometer-scale measurements. Available with 70, 145 and 292nm pitch.

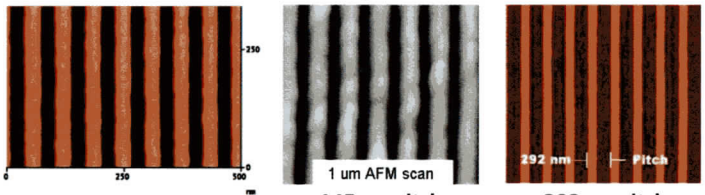

70nm pitch **145nm pitch** **292nm pitch**

70nm Pitch Reference Standard for Very High Resolution Calibration for AFM, SEM, Auger and FIB.

Period: 70nm pitch nominal, one dimensional array. Accuracy is +/- 0.25nm. Calibration certificate will give the actual pitch of the standard.

Surface structure: Silicon Dioxide ridges on Silicon, 4x3mm dimensions. Ridge height and width are both about 35nm (not calibrated).

Usability: The calibrated pattern covers a 1.2 x 0.5mm area. There is sufficient usable area to make thousands of measurements without reusing any areas contaminated or altered by previous scans.

AFM: Use in contact, tapping and other modes with image sizes from 100nm to 3um. Mounted on a 12mm steel AFM disk.

SEM, Auger, FIB: Can be used for a wide range of accelerating voltage (1kV-20kV) and calibrates images from 25kX to 1000kX. Can be supplied unmounted or mounted on an SEM stub of your choice.

Certification: There is a version with a non-traceable manufacturer's certificate stating average pitch, based on batch measurements.
There is also the traceable, certified version measured in comparison with a standard calibrated at PTB (Physiklisch-Technischen Bundesanstalt in Braunschweig, Germany, is the German counterpart of NIST). The standard is NIST traceable by virtue of the mutual recognition agreement by NIST and PTB.

70nm AFM Reference Standard, Certified, Non-traceable, Mounted on disk:

641-1AFM 70nm Very High Resolution AFM Reference Standard on 12mm steel disk . . . . . .each

70nm SEM, Auger and FIB Reference Standard, Certified, Non-traceable

641-1 70nm Very High Resolution AFM Reference Standard, Unmounted . . . . . .each

continued on next page

High Magnification, High Resolution Reference and Calibration Standards for AFM, SEM, Auger and FIB *continued*

70nm SEM, Auger and FIB Reference Standard, Certified, Traceable, Mounted on disk

641-11AFM 70nm Very High Resolution AFM Reference Standard, Traceable, on 12mm steel disk each

70nm SEM, Auger and FIB Reference Standard, Certified, Traceable, Unmounted

641-11 70nm Very High Resolution AFM Reference Standard, Traceable, Unmounted . . . . . .each

145nm Pitch Calibration Standard for AFM

Precision holographic pattern for accurate calibration for high resolution, nanometer scale measurements.

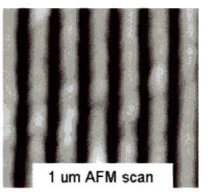

145nm pitch

Period: 145nm pitch nominal, one dimensional array. Accuracy is +/- 1nm. Calibration certificate will give the actual pitch of the standard.

Surface structure: Aluminum lines on glass, 4x6mm dimensions. Line height (about 100nm) and line width (about 75nm) are not calibrated.

Usability: The calibrated pattern covers the entire standard. There is sufficient usable area to make tens of thousands of measurements without reusing any areas contaminated or altered by previous scans.

AFM: Use in contact, tapping and other modes with image sizes from 250nm to 10um. Available unmounted or mounted on a 12mm steel AFM disk.

Certification: Comes with a non-traceable manufacturer's certificate stating average pitch, based on batch measurements.

145nm AFM Reference Standard, Certified, Non-traceable, Mounted on disk

642-1AFM 145nm Very High Resolution AFM Reference Standard on 12mm steel disk . . . . . .each

145nm AFM Reference Standard, Certified, Non-traceable, Unmounted

642-1 145nm Very High Resolution AFM Reference Standard, Unmounted . . . . . .each

292nm Pitch High Magnification, High Resolution Calibration Standard for AFM, SEM, Auger and FIB

Precision holographic grating standard with high contrast and excellent edge definition.

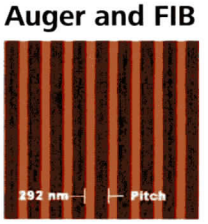

292nm pitch

Period: 292nm pitch nominal, one dimensional array. Accuracy is +/- 1%. Calibration certificate will give the actual pitch of the standard.

Surface structure: Titanium lines on Silicon, 4x3mm dimensions. Line height (about 30nm) and line width (130nm) are not calibrated.

Usability: The calibrated pattern covers the entire chip. There is sufficient usable area to make tens of thousands of measurements without reusing any areas contaminated or altered by previous scans.

AFM: Use in contact, tapping and other modes with image sizes from 500nm to 20um. Mounted on a 12mm steel AFM disk.

SEM, Auger, FIB: Can be used for a wide range of accelerating voltage (<1kV-30kV) and calibrates images from 5kX to 200kX. Can be supplied unmounted or mounted on an SEM stub of your choice.

Certification: There is a version with a non-traceable manufacturer's certificate stating average pitch, based on batch measurements.

There is also the traceable, certified version measured in comparison with a standard calibrated at PTB (Physiklisch-Technischen Bundesanstalt in Braunschweig, Germany, is the German counterpart of NIST). The standard is NIST traceable by virtue of the mutual recognition agreement by NIST and PTB.

292nm AFM Reference Standard, Certified, Non-traceable, Mounted on disk

643-1AFM 292nm High Resolution AFM Reference Standard on 12mm steel disk . . . . . .each

292nm SEM, Auger and FIB Reference Standard, Certified, Non-traceable, Unmounted

643-1 292nm High Resolution AFM Reference Standard, Unmounted . . . . . .each

292nm AFM Reference Standard, Certified, Traceable, Mounted on disk

643-11AFM 292nm High Resolution AFM Reference Standard on 12mm steel disk . . . . . .each

292nm SEM, Auger and FIB Reference Standard, Certified, Traceable, Unmounted

641-11 292nm High Resolution AFM Reference Standard, Traceable, Unmounted . . . . . .each

Critical Dimension (CD) Calibration Test Specimens

for SEM, FIB, and AFM

"Critical Dimension (CD) structures" are particularly useful for SEM / FIB magnification calibration and may be used for AFM

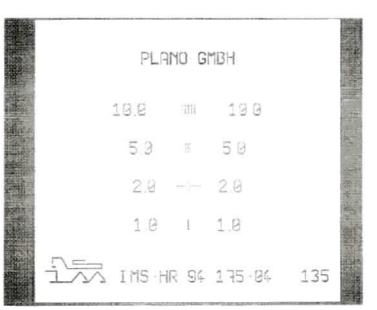

Microscopists and engineers using high performance SEMs or FIB systems will find this calibration test specimen useful. The 4.8 x 4.8mm silicon standard has a series of patterns with a side length of 480µm around its edges, helpful for orientation. There are three versions available.

continued on next page

Critical Dimension (CD) Calibration Test Specimens *continued*

Version with a 10-5-2-1µm with a central area comprises four line patterns, each one clearly identified by its pitch. Each pattern has five bars and spaces of equal pitch: 1.0µm, 2.0µm, 5.0µm and 10.0µm. The central line structure area may be used for AFM measurements. The patterns are etched into Si, approximately 200nm deep. The patterns are therefore slightly lower than the Si surface. There is no coating on the Si surface. Each standard is identified by a serial number.

Unmounted

618-1 CD Structure 1-2-5-10µm Specimen, Non-certified, Unmounted . . . . . .each

Version with a 10-5-2-1-0.5um Structure

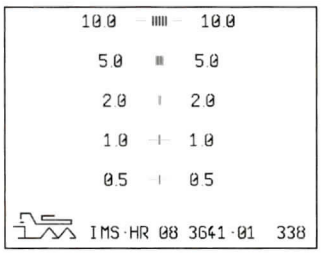

This CD calibration test specimen comprises of 5 line patterns, each one clearly identified by its pitch. Each pattern has five bars and spaces of equal pitch:10.0um, 5.0um, 2.0um, 1.0um and 0.5um. The central line area may be used for AFM measurements. The patterns are etched into Si with a depth of approximately 200nm. There is no coating on the Si surface.

Unmounted

618-5 CD Structure 10-5-2-1-0.5µm Specimen, non-certified, unmounted . . . . . .each

618-7 CD Structure 10-5-2-1-0.5um Specimen, certified traceable by German Physikalische Technical Bundesanstalt, unmounted . . . . . .each

Version with a 500-200-100nm Structure

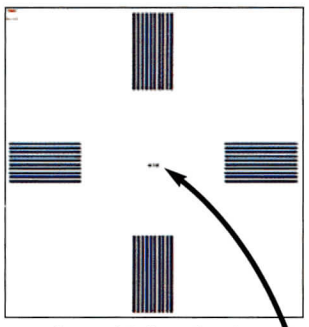

overview with location bars

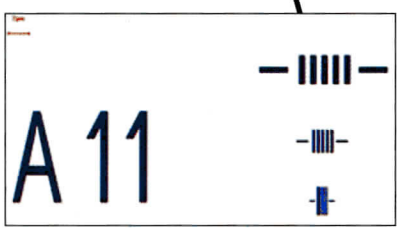

structure

This advanced CD calibration test specimen is suited for calibrating smaller structures. The 500-200-100nm test specimen comprises 3 line patterns, each identified by its pitch. Each pattern has 5 bars and spaces with equal pitch: 500nm, 200nm and 100nm. The central area may be used for AFM measurements. The patterns are etched into Si with a depth of approx. 45-50nm. There is no coating on the Si surface. On some CD calibration targets one of the 100nm lines can be missing, this is a normal occurrence and does not influence performance of the specimen.

Unmounted

618-4 CD Structure 500-200-100nm Specimen, Non-certified, unmounted . . . . . .each

2D Holographic Array Standards

Very High Resolution 2D Calibration Standard for AFM, STM, Auger, FIB, and SEM

Period: 144nm pitch, two-dimensional array. Accurate to ±1nm. Refer to calibration certificate for actual pitch.

Surface: Aluminum bumps on Silicon, 4x3mm die. Bump height (about 90nm) and width (about 75nm) are not calibrated.

Usability: the calibrated pattern covers the entire chip. There is sufficient usable area to make tens of thousands of measurements without reusing any areas altered or contaminated by previous scans.

AFM: use in contact, intermittent contact (TappingMode™) and other modes with image sizes from 250nm to 10mm. Available unmounted or mounted on 12mm steel disks.

SEM: this specimen works well at all accelerating voltages. Normally supplied unmounted. Can be mounted on a stub of your choice.

Model 2D: This Calibration Reference specimen comes with a non-traceable, manufacturer's certificate. This states the average period, based on batch measurements.

Model 2DUTC: This Traceable, Certified Standard is a select grade. Each standard is individually measured in comparison with a similar specimen calibrated at PTB. (PTB, Physikalisch-Technischen Bundesanstalt, is the German counterpart of NIST.) The uncertainty of single pitch values is typically ±1.4nm (95% confidence interval). Multi-pitch measurements provide the usual square-root of N improvement in precision.

Easy to use

The 2D holographic Array with 144nm is recommended because of the unique characteristics that make it especially easy to use. The pattern is durable and allows for scanning in contact mode, which means that calibration and measurements are faster. This is the only high resolution 2D calibration standard we know of that has all of the following characteristics that are needed for ease of use:

- 2-dimensional array for simultaneous calibration of X and Y axes
- Pitch < 500nm
- Array of bumps means the image contrast is high even when the probe tip is slightly dull
- High contrast in contact mode scans
- Pattern covers the entire die, no need to hunt for the scan area.

AFM images:

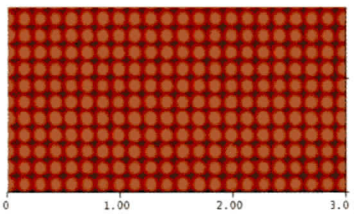

Tapping Mode 3µm AFM scan

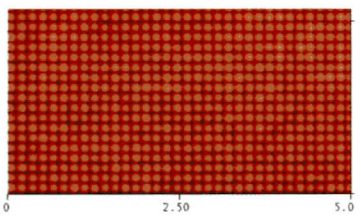

Contact Mode 5µm AFM scan

During scanning in contact mode using a 0.5 N/m SiN cantilever, no surface or tip wear affecting the image was noticed.

Further information available on our web site.

continued on next page

2D Holographic Array Standards

continued

SEM Images

High Magnification

The following image (inset) was captured with a magnification setting of 100 kX and accelerating voltage 10 kV. Outside Image 20 kV.

Medium Magnification

At 5 kX, the individual bumps were still well-resolved. Large fields of view show how few defects are present. The most common defects are single missing bumps or a single extra bump inserted between lattice positions. Two vacancies are present in the image shown here.

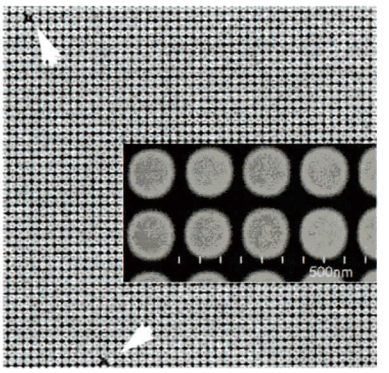

SEM Reference Standards, Non-certified, Unmounted

16465-2D 2D Pattern Calibration Standard, unmounted . . . . . .each

AFM Reference Standard, Non-certified, Mounted on Disk

16465-2D-AFM 2D Pattern Calibration Standard, on 12mm steel disk . . . . . .each

SEM Reference Standards, Certified Traceable, Calibration Certificate Provided, Unmounted

16465-2DUTC 2DUTC Pattern Calibration Standard, unmounted, with certificate . . . . . .each

AFM Reference Standard, Certified, Mounted on Disk

16465-2DUTC-AFM 2DUTC-AFM Pattern Calibration Standard, on Mount AFM, with certificate . . . . . .each

300nm Pitch High Resolution 2D Calibration Standard for AFM, STEM, SEM, Auger and FIB.

Period: 300nm pitch nominal, one dimensional array. Calibration certificate will give the actual pitch of the standard.

Surface Structure: Aluminum bumps on Silicon, 4 x 3mm die: Bump height (about 50nm) and width (about 150nm) not calibrated.

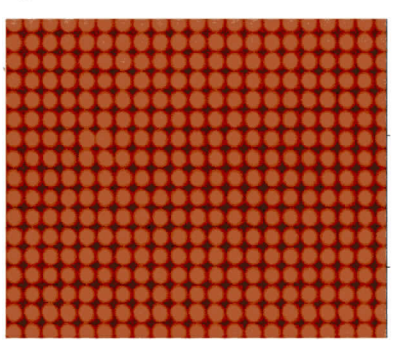

Usability: The calibrated pattern covers the entire chip. There is sufficient usable area to make thousands of measurements without reusing any areas contaminated or altered by previous scans.

AFM: Use in contact, tapping and other modes with image sizes from 500nm to20nm. Mounted on a 12mm steel AFM disk.

SEM: Auger, FIB: Can be used for a wide range of accelerating voltage (1kV-20kV) and calibrates images from 5kX to 200kX. Can be supplied unmounted or mounted on an SEM stub of your choice. SEM Mount selection A-M.

Certification: Supplied with a non-traceable manufacturer's certificate stating average pitch, based on batch measurements.

300nm 2D AFM Reference Standard, Certified, Non-traceable, Mounted on Disk

16475-1AFM 300nm 2D Resolution AFM Reference Standard on12mm steel disk . . . . . .each

300nm 2D SEM, Auger and FIB Reference Standard, Certified, Non-traceable Un-mounted

16475-1 300nm 2D Resolution AFM Reference Standard, unmounted . . . . . .each

PELCO® AFM Tip and Resolution Test Specimen

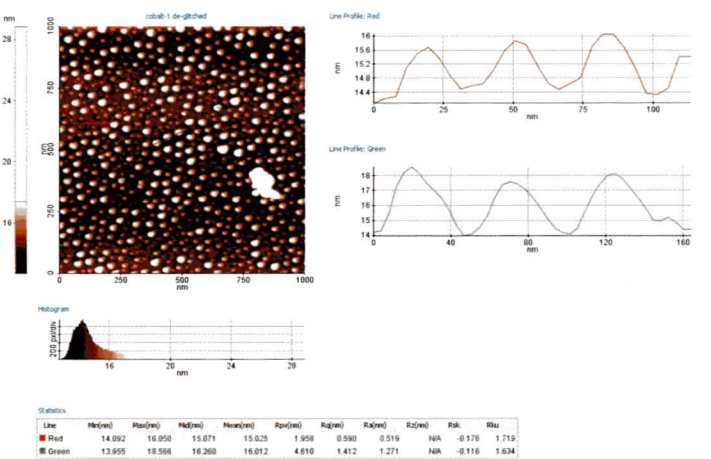

Colloidal cobalt provides an excellent substrate for AFM tip characterization and instrument operation. Image at top demonstrates height calibration at 1nm (red line profile) and 3nm (green line profile) on the standard.

Available on 5x5mm silicon wafer chips unmounted on 15mm stainless steel metal disk. Tip characterization down to angstrom resolution is easily attained. Image at top demonstrates 1 and 3nm height resolution accurate to 0.05nm.

628 PELCO® AFM Tip and Resolution Test Specimen, Unmounted . . . . . .each

628-AFM PELCO® AFM Tip and Resolution Test Specimen, Mount AFM . . . . . .each